or administrative proceeding, other than an administrative proceeding initiated by the United States. 46 U.S.C. §6308.

BILL OF MATERIAL

PIECE MARK		ITEM DESCRIPTION		ASTM SPEC.
P-4	4"	PIPE - XHY - BLACK		A53-GR.B
P-3	3"	PIPE - XHY - BLACK		A53-GR.B
P-2	2"	PIPE - STD - GALV.		A53-GR.B
P-1½	1½"	PIPE - STD - GALV.		A53-GR.B
P-1½/80	1½"	PIPE - XHY - BLACK		A53-GR.B
P-2½	2½"	PIPE - XHY - BLACK		A53-GR.B
BL-3	3"	BUTTERFLY VALVE - 150# LUG	DEMCO 12347-191211	A 395
BW-3	3"	BUTTERFLY VALVE - 150# WAFER	DEMCO 12347-191211	A 395
BW-2½	2½"	BUTTERFLY VALVE - 150# WAFER	DEMCO 12347-191211	A-395
GV-2½	2½"	GATE VALVE - 300# BRZ - SCR'D	STOCKHAM FIG-147	B-61
GV-2	2"	GATE VALVE - 300# BRZ - SCR'D	STOCKHAM FIG-147	B-61
GV-1½	1½"	GATE VALVE - 300# BRZ - SCR'D	STOCKHAM FIG-147	B-61
AV-1½	1½"	ANGLE VALVE - 125# BRZ - SCR'D / CAP	CRANE	B-62
CV-2½	2½"	CHECK VALVE - 125# BRZ - SCR'D	STOCKHAM FIG B-319	B-62
CV-2	2"	CHECK VALVE - 125# BRZ - SCR'D	STOCKHAM FIG B-319	B-62
CV-1½	1½	CHECK VALVE - 125# BRZ - SCR'D	STOCKHAM FIG B-319	B-62
E3	3"	90° ELL - XHY - BLK - B.W.		A-234
E2½	2½"	90° ELL - XHY - BLK - B.W.		A-234
E2	2"	90° ELL - 150# GALV. - SCR'D		A-197
E2/80	2"	90° ELL - XHY - BLK. - B.W.		A-234
E1½	1½"	90° ELL - STD GALV. - SCR'D		A-197
E2½/45	2½"	45° ELL - XHY - BLK. - B.W.		A-234
T3	3"	TEE - XHY - BLK - B.W.		A-234
T2	2"	TEE - 150# GALV. SCR'D		A-197
T-1½	1½"	TEE - XHY - BLK - B.W.		A-234
T2/80	2"	TEE - XHY - BLK - B.W.		A-234
RT 3x3x2	3"x3"x2"	REDUCING TEE - XHY BLK - B.W.		A-234
U 2½	2½"	UNION - 300# BLK - SCR'D		A-197
U 2	2"	UNION - 300# GALV - SCR'D		A-197
U 1½	1½"	UNION - 300# BLK - SCR'D		A-197
F3	3"	FLANGE - 150# - F.F.S.O. BLK		A-181 GR.10
F2½	2½"	FLANGE - 150# - FF.S.O. BLK		A-181 GR.10
C-2½	2½"	COUPLING - 3000# - BLK - S.W.		B16.11
C-2	2"	COUPLING - 3000# - BLK - S.W.		B16.11
C-1½	1½"	COUPLING - 3000# - BLK - S.W.		B16.11
CR-3	3"	CHILL RING - XHY		
CR-2½	2½"	CHILL RING - XHY		
CR-2	2"	CHILL RING - XHY		
SB	3"	SIMPLEX STRAINER - FLANGED	HAYWARD MOD-71-CAST IRON	A-126
S2	2"	SIMPLEX STRAINER - SCREWED	HAYWARD MOD-71-CAST IRON	A-126
SW 3x2	3"x2"	SWEDGE - 2" THREADED x 3" B.W. - BLK		A-48
G3	3"	GASKET - F.F.		
BP	2"x2"	BILGE PUMP - 5 H.P MOTOR 208V/3Ø	BARNES M/N 10CCE	
FP	3"x3"	FIRE PUMP - 15 H.P. MOTOR 208V/3Ø	BARNES M/N 25CCE	
P2/80	2"	SCH 80 PIPE - BLK -		A53-GR.B
P-2½/80	2½"	SCH 80 PIPE - BLK -		A53-GR.B
E1½/45	1½"	45° ELL - XHY - BLK - B.W.		A-234
E2/45	2"	45° ELL - XHY - BLK - B.W.		A-234
B 2x1	2"x1"	BUSHING		A-234

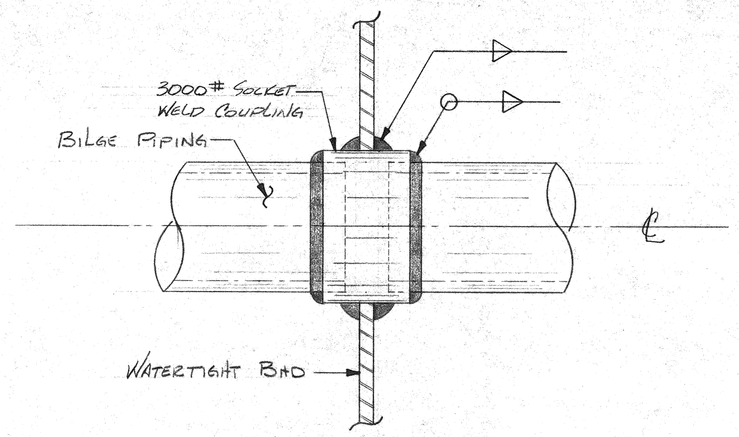

TYPICAL WATERTIGHT BHD PENETRATION
NO SCALE

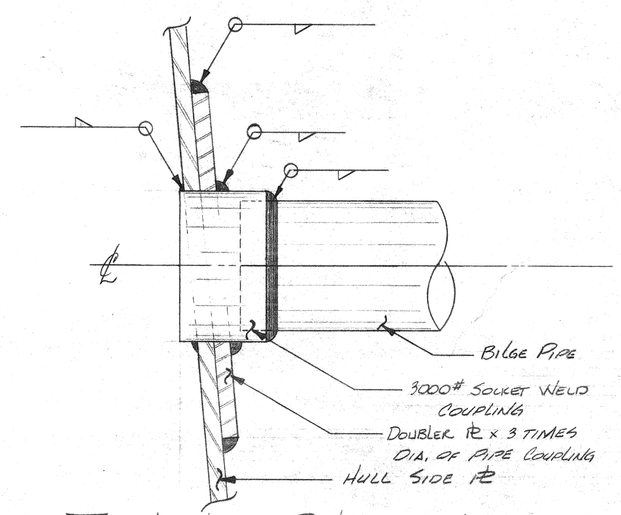

TYPICAL HULL PENETRATION
NO SCALE

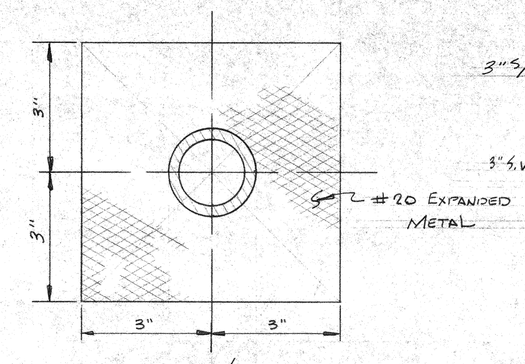

TOP VIEW

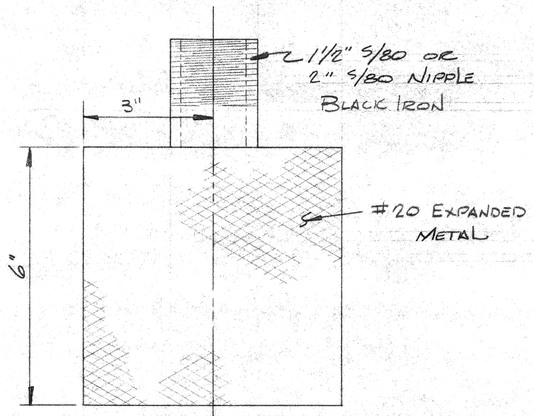

SIDE VIEW

TYPICAL FOOT STRAINER
½" = 1'

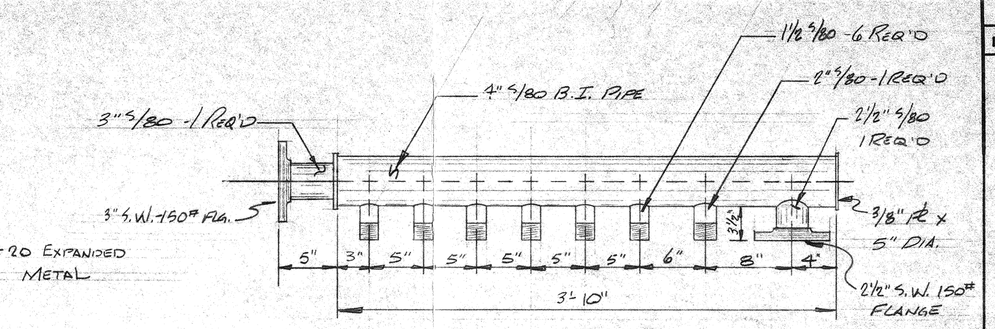

MANIFOLD DETAIL
1½" = 1'-0"

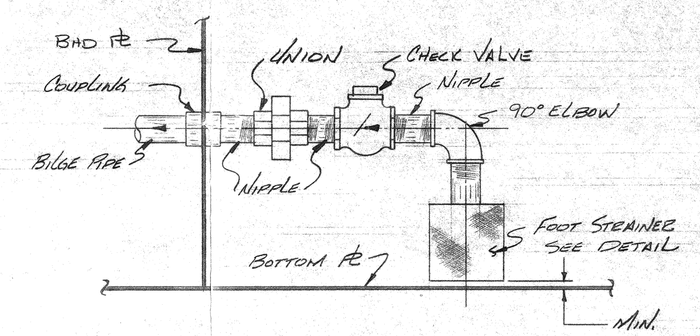

TYPICAL BILGE SUCTION

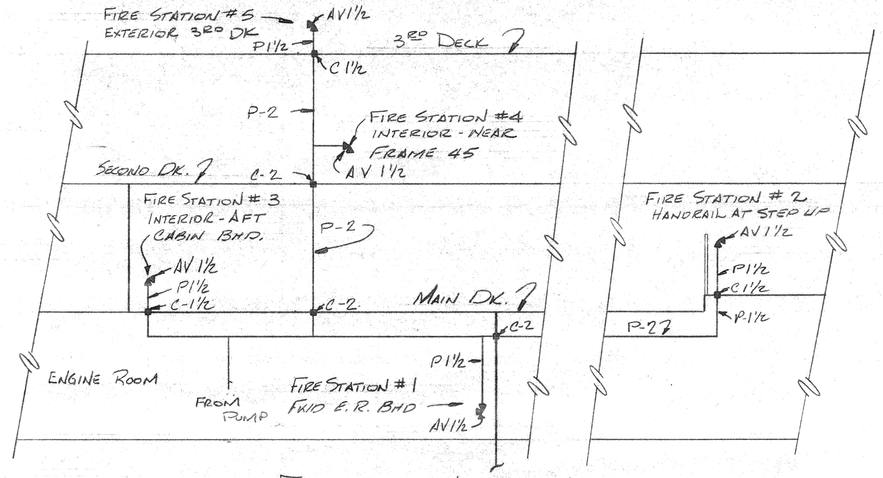

FIRE STATION PROFILE
SEE FIRE PROTECTION PLAN

NOTE:
FOR STATION LOCATIONS
SEE DWG. #11030 SM1

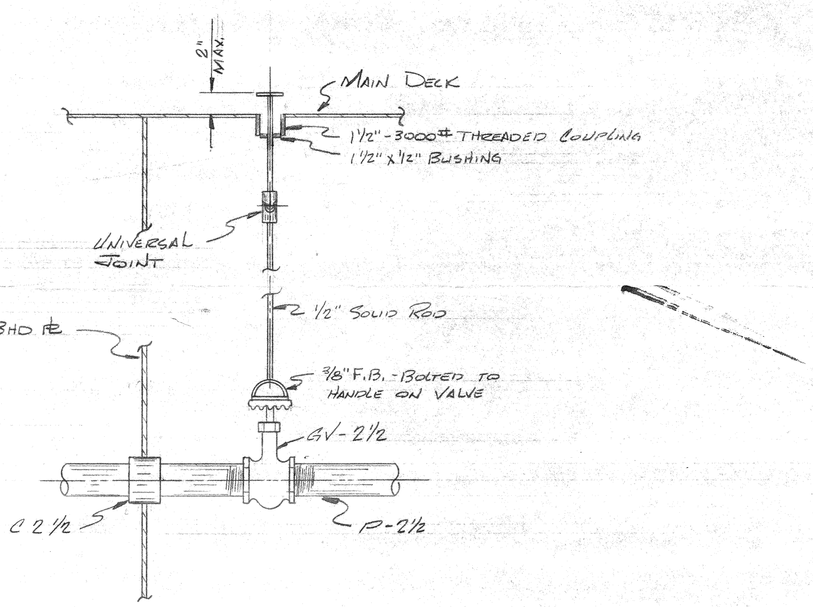

REACH ROD DETAIL

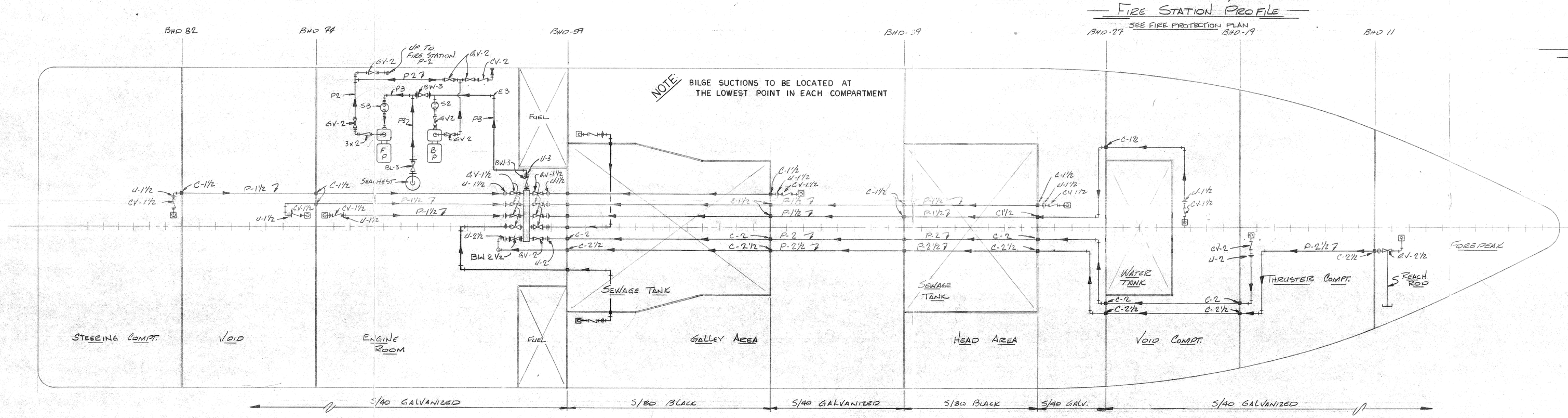

NOTE: BILGE SUCTIONS TO BE LOCATED AT THE LOWEST POINT IN EACH COMPARTMENT

REVISION			
No.	DATE	DESCRIPTION	APV'D.

This drawing is the the exclusive property of Service Marine Industries, Inc. and is furnished on a confidential basis. No portion of this drawing may be copied, traced, photographed, or in any other way reproduced; nor may any item hereon depicted be manufactured as shown without the written consent of Service Marine Industries, Inc. The recipient of the information contained hereon may not disclose the same to any other person or business firm; nor may he use such information except for the specific purpose intended.

189' x 40' x 12'-9"
DINNER / EXCURSION VESSEL

BILGE AND FIRE SYSTEM

Service Marine Industries, Inc.
Morgan City, La.

SCALE	NOTED	DATE	AUGUST 14, 1991
DRAWN	R.R. MONTEAUX	APP'D.	
HULL NO.	1693	DWG. NO.	